Manualslib.com - The Global Manuals Library

TROY-BILT TB20CS OPERATOR'S MANUAL

Quick Links

Service Information
Oil and Fuel Mixing Instructions
Line Installation
Carburetor Adjustment
Specifications

Table of Contents

Service Information
Table of contents
Spark Arrestor Note
Rules for Safe Operation
Important Safety Instructions
Before Operating
Safety Warnings For Gas Units
While Operating
Other Safety Warnings
Safety and International Symbols
Trimmer overview
Know Your Unit
Applications
Assembly Instructions
Install and Adjust the D-Handle
Installing the cutting attachment shield
Oil and Fuel Mixing Instructions
Oil and Fuel Information
Definition of Blended Fuels
Using Blended Fuels
Starting Instructions
Stopping Instructions
Operating the EZ-Link System
Removing the Cutting Attachment of Add-Ons
Installing the Cutting Attachment or Add-Ons
Holding the Trimmer
Adjusting Trimming Line Length
Tips for Best Trimming Results
Decorative Trimming

Maintenance Schedule
Line Installation
Winding the Existing Inner Reel
Single Line Installation
SplitLine Installation
Installing a Prewound Reel
Air Filter Maintenance
Cleaning the Air Filter
Reinstalling the Air Filter/Muffler Cover
Spark Arrestor Maintenance
Carburetor Adjustment
Check Fuel Mixture
Adjust Idle Speed Screw
Replacing the Spark Plug
Transporting
Cleaning
Storage
Troubleshooting
Engine Will Not Start
Engine Will Not Idle
Engine Will Not Accelerate
Specifications
Other ManualsLib Projects

TROY-BILT®

Operator's Manual

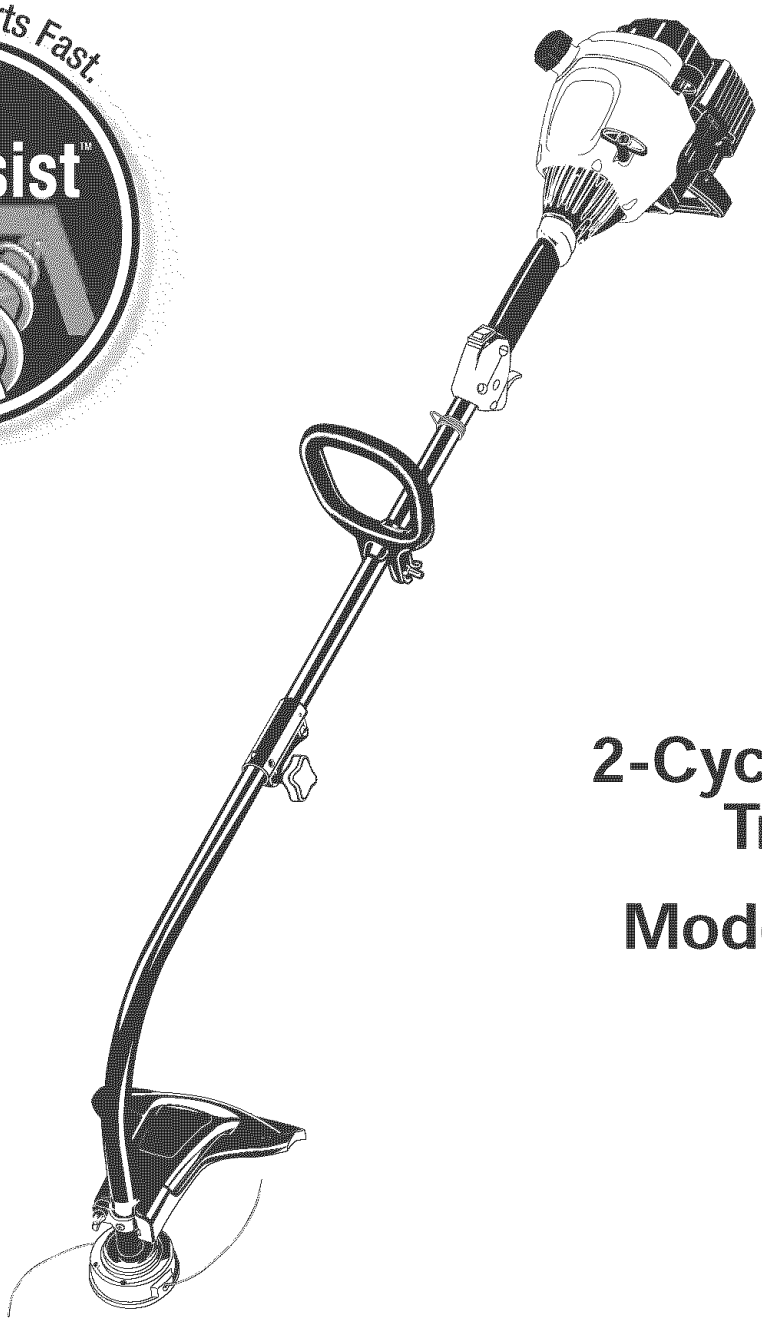

2-Cycle Gasoline Trimmer

Model TB20CS

IMPORTANT: READ SAFETY RULES AND INSTRUCTIONS CAREFULLY

P/N 769-01467 (10/04)
PRINTED IN USA

Downloaded from www.Manualslib.com manuals search engine

INTRODUCTION

THANK YOU

Thank you for buying this quality product. This modern outdoor power tool will provide many hours of useful service. You will find it to be a great labor-saving device. This operator's manual provides you with easy-to-understand operating instructions. Read the whole manual and follow all the instructions to keep your new outdoor power tool in top operating condition.

PRODUCT REFERENCES, ILLUSTRATIONS AND SPECIFICATIONS

All information, illustrations, and specifications in this manual are based on the latest product information available at the time of printing. We reserve the right to make changes at any time without notice.

Copyright© 2004 MTD SOUTHWEST INC, All Rights Reserved.

SERVICE INFORMATION

Service on this unit both within and after the warranty period should be performed only by an authorized and approved service dealer.

For service call **1-800-520-5520** to obtain a list of authorized service dealers near you. For more details about your unit, visit our website at **www.troybilt.com**.

DO NOT RETURN THE UNIT TO THE RETAILER. PROOF OF PURCHASE WILL BE REQUIRED FOR WARRANTY SERVICE.

Before beginning, locate the unit's model plate. It lists the model and serial numbers of your unit. Refer to the sample plate below and copy the information for future reference.

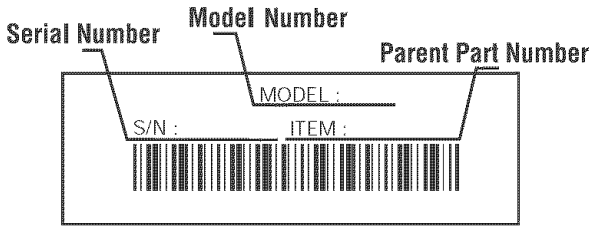

Copy the model and parent part number here: _____

Copy the serial number here: _____

Make sure you carefully read and understand this manual before starting or operating this equipment.

THIS PRODUCT IS COVERED BY ONE OR MORE U.S. PATENTS. OTHER PATENTS PENDING.

TABLE OF CONTENTS

Service Information 2
Rules for Safe Operation 3
Know Your Unit 6
Assembly Instructions 7
Oil and Fuel Information 8
Starting/Stopping Instructions 9
Operating Instructions 10
Maintenance and Repair Instructions 12
Cleaning and Storage 16
Troubleshooting Chart 17
Specifications 18
Warranty Information 20
Parts List . . . . . .Inside Back Cover

SPARK ARRESTOR NOTE

NOTE: For users on U.S. Forest Land and in the states of California, Maine, Oregon and Washington. All U.S. Forest Land and the state of California (Public Resources Codes 4442 and 4443), Oregon and Washington require, by law that certain internal combustion engines operated on forest brush and/or grass-covered areas be equipped with a spark arrestor, maintained in effective working order, or the engine be constructed, equipped and maintained for the prevention of fire. Check with your state or local authorities for regulations pertaining to these requirements. Failure to follow these requirements could subject you to liability or a fine. **This unit is factory equipped with a spark arrestor**. If it requires replacement, ask your LOCAL SERVICE DEALER to install the **Accessory Part #753-04689 Spark Arrestor Kit.**

CALIFORNIA PROPOSITION 65 WARNING

WARNING

THE ENGINE EXHAUST FROM THIS PRODUCT CONTAINS CHEMICALS KNOWN TO THE STATE OF CALIFORNIA TO CAUSE CANCER, BIRTH DEFECTS OR OTHER REPRODUCTIVE HARM.

Downloaded from www.Manualslib.com manuals search engine

RULES FOR SAFE OPERATION

The purpose of safety symbols is to attract your attention to possible dangers. The safety symbols, and their explanations, deserve your careful attention and understanding. The safety warnings do not by themselves eliminate any danger. The instructions or warnings they give are not substitutes for proper accident prevention measures.

SYMBOL	MEANING
⚠	**SAFETY ALERT:** Indicates danger, warning or caution. Attention is required in order to avoid serious personal injury. May be used in conjunction with other symbols or pictographs.

NOTE: Advises you of information or instructions vital to the operation or maintenance of the equipment.

Read the Operator's Manual(s) and follow all warnings and safety instructions.
Failure to do so can result in serious injury to the operator and/or bystanders.

FOR QUESTIONS, CALL 1-800-520-5520

SYMBOL	MEANING
⚠	**DANGER:** Failure to obey a safety warning will result in serious injury to yourself or to others. Always follow the safety precautions to reduce the risk of fire, electric shock and personal injury.
⚠	**WARNING:** Failure to obey a safety warning can result in injury to yourself and others. Always follow the safety precautions to reduce the risk of fire, electric shock and personal injury.
⚠	**CAUTION:** Failure to obey a safety warning may result in property damage or personal injury to yourself or to others. Always follow the safety precautions to reduce the risk of fire, electric shock and personal injury.

• IMPORTANT SAFETY INSTRUCTIONS •

READ ALL INSTRUCTIONS

BEFORE OPERATING

⚠ **WARNING:** When using the unit, you must follow the safety rules. Please read these instructions before operating the unit in order to ensure the safety of the operator and any bystanders. Please keep these instructions for later use.

- Read the instructions carefully. Be familiar with the controls and proper use of the unit.
- Do not operate this unit when tired, ill, or under the influence of alcohol, drugs, or medication.
- Children and teens under the age of 15 must not use the unit, except for teens guided by an adult.
- All guards and safety attachments must be installed properly before operating the unit.
- Inspect the unit before use. Replace damaged parts. Check for fuel leaks. Make sure all fasteners are in place and secure. Replace parts that are cracked, chipped, or damaged in any way. Do not operate the unit with loose or damaged parts.
- Carefully inspect the area before starting the unit. Remove all debris and hard or sharp objects such as glass, wire, etc.
- Be aware of the risk of injury to the head, hands and feet.
- Clear the area of children, bystanders, and pets. At a minimum, keep all children, bystanders, and pets outside a 50 feet (15 m.) radius; there still may be a risk to bystanders from thrown objects. Bystanders should be encouraged to wear eye protection. If you are approached, stop the unit immediately.
- Use only 0.080 inch (2.03 mm) diameter original equipment manufacturer replacement line. Never use metal-reinforced line, wire or rope. These can break off and become dangerous projectiles.
- Squeeze the throttle control and check that it returns automatically to the idle position. Make all adjustments or repairs before using unit.

SAFETY WARNINGS FOR GAS UNITS

⚠ **WARNING:** Gasoline is highly flammable, and its vapors can explode if ignited. Take the following precautions:

- Store fuel only in containers specifically designed and approved for the storage of such materials.
- Avoid creating a source of ignition for spilled fuel. Do not start the engine until fuel vapors dissipate.

Downloaded from www.Manualslib.com manuals search engine

- Always stop the engine and allow it to cool before filling the fuel tank. Never remove the cap of the fuel tank, or add fuel, when the engine is hot. Never operate the unit without the fuel cap securely in place. Loosen the fuel tank cap slowly to relieve any pressure in the tank.
- Mix and add fuel in a clean, well-ventilated outdoor area where there are no sparks or flames. Slowly remove the fuel cap only after stopping engine. Do not smoke while fueling or mixing fuel. Wipe up any spilled fuel from the unit immediately. Always wipe unit dry before using.
- Move the unit at least 30 feet (9.1 m) from the fueling source and site before starting the engine. Do not smoke or allow sparks and open flames near the area while adding fuel or operating the unit.

WHILE OPERATING

- Never start or run the unit inside a closed room or building. Breathing exhaust fumes can kill. Operate this unit only in a well ventilated outdoor area.
- Wear safety glasses or goggles that are marked as meeting ANSI Z87.1-1989 standards. Also wear ear/hearing protection when operating this unit. Wear a face or dust mask if the operation is dusty. Long sleeve shirts are recommended.
- Wear heavy, long pants, boots and gloves. Do not wear loose clothing, jewelry, short pants, sandals or go barefoot. Secure hair above shoulder level.
- The cutting attachment shield must always be in place while operating the unit. Do not operate unit without both trimming lines extended, and the proper line installed. Do not extend the trimming line beyond the length of the shield.
- This unit has a clutch. The cutting attachment remains stationary when the engine is idling. If it does not, have the unit adjusted by an authorized service technician.
- Adjust the D-handle to your size to provide the best grip.
- Be sure the cutting attachment is not in contact with anything before starting the unit.
- Use the unit only in daylight or good artificial light.
- Avoid accidental starting. Be in the starting position whenever pulling the starter rope. The operator and unit must be in a stable position while starting. See *Starting/Stopping Instructions*.
- Use the right tool. Only use this tool for the purpose intended.
- Do not overreach. Always keep proper footing and balance.
- Always hold the unit with both hands when operating. Keep a firm grip on both the front and rear handle or grips.
- Keep hands, face, and feet at a distance from all moving parts. Do not touch or try to stop the cutting attachment when it is rotating.
- Do not touch the engine or muffler. These parts get extremely hot from operation. They remain hot for a short time after you turn off the unit.
- Do not operate the engine faster than the speed needed to cut, trim or edge. Do not run the engine at high speed when you are not cutting.
- Always stop the engine when cutting is delayed or when walking from one cutting location to another.
- If you strike or become entangled with a foreign object, stop the engine immediately and check for damage. Do not operate before repairing damage. Do not operate the unit with loose or damaged parts.
- Stop and switch the engine to off for maintenance, repair, or for changing the cutting attachment or other attachments.

  Use only original equipment manufacturer replacement parts and accessories for this unit. These are available from your authorized service dealer. Use of any unauthorized parts or accessories could lead to serious injury to the user, or damage to the unit, and void your warranty.
- Keep unit clean of vegetation and other materials. They may become lodged between the cutting attachment and shield.
- To reduce fire hazard, replace faulty muffler and spark arrestor, keep the engine and muffler free from grass, leaves, excessive grease or carbon build up.

OTHER SAFETY WARNINGS

- Never store the unit, with fuel in the tank, inside a building where fumes may reach an open flame or spark.
- Allow the engine to cool before storing or transporting. Be sure to secure the unit while transporting.
- Store the unit in a dry area, locked up or up high to prevent unauthorized use or damage, out of the reach of children.
- Never douse or squirt the unit with water or any other liquid. Keep handles dry, clean and free from debris. Clean after each use. See the *Cleaning and Storage* instructions.
- Keep these instructions. Refer to them often and use them to instruct other users. If you loan someone this unit, also loan them these instructions.

SAVE THESE INSTRUCTIONS

Downloaded from www.Manualslib.com manuals search engine

SAFETY AND INTERNATIONAL SYMBOLS

This operator's manual describes safety and international symbols and pictographs that may appear on this product. Read the operator's manual for complete safety, assembly, operating and maintenance and repair information.

SYMBOL	MEANING
	• **SAFETY ALERT SYMBOL** Indicates danger, warning, or caution. May be used in conjunction with other symbols or pictographs.
	• **WARNING - READ OPERATOR'S MANUAL** Read the Operator's Manual(s) and follow all warnings and safety instructions. Failure to do so can result in serious injury to the operator and/or bystanders.
	• **WEAR EYE AND HEARING PROTECTION** **WARNING:** Thrown objects and loud noise can cause severe eye injury and hearing loss. Wear eye protection meeting ANSI Z87.1-1989 standards and ear protection when operating this unit. Use a full face shield when needed.
	• **KEEP BYSTANDERS AWAY** **WARNING:** Keep all bystanders, especially children and pets, at least 50 feet (15 m.) from the operating area.
	• **UNLEADED FUEL** Always use clean, fresh unleaded fuel.

SYMBOL	MEANING
	• **THROWN OBJECTS AND ROTATING CUTTER CAN CAUSE SEVERE INJURY** **WARNING:** Do not operate without the cutting attachment shield in place. Keep away from the rotating cutting attachment.
	• **ON/OFF STOP CONTROL** ON / START / RUN
	• **ON/OFF STOP CONTROL** OFF or STOP
	• **HOT SURFACE WARNING** Do not touch a hot muffler or cylinder. You may get burned. These parts get extremely hot from operation. When turned off they remain hot for a short time.
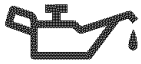	• **OIL** Refer to operator's manual for the proper type of oil.

Downloaded from www.Manualslib.com manuals search engine

KNOW YOUR UNIT

APPLICATIONS

As a trimmer:

- Cutting grass and light weeds.
- Edging
- Decorative trimming around trees, fences, etc.

Other optional accessories may be used with the TB20CS. Refer to *Operating the EZ-Link System* for a list of add-ons.

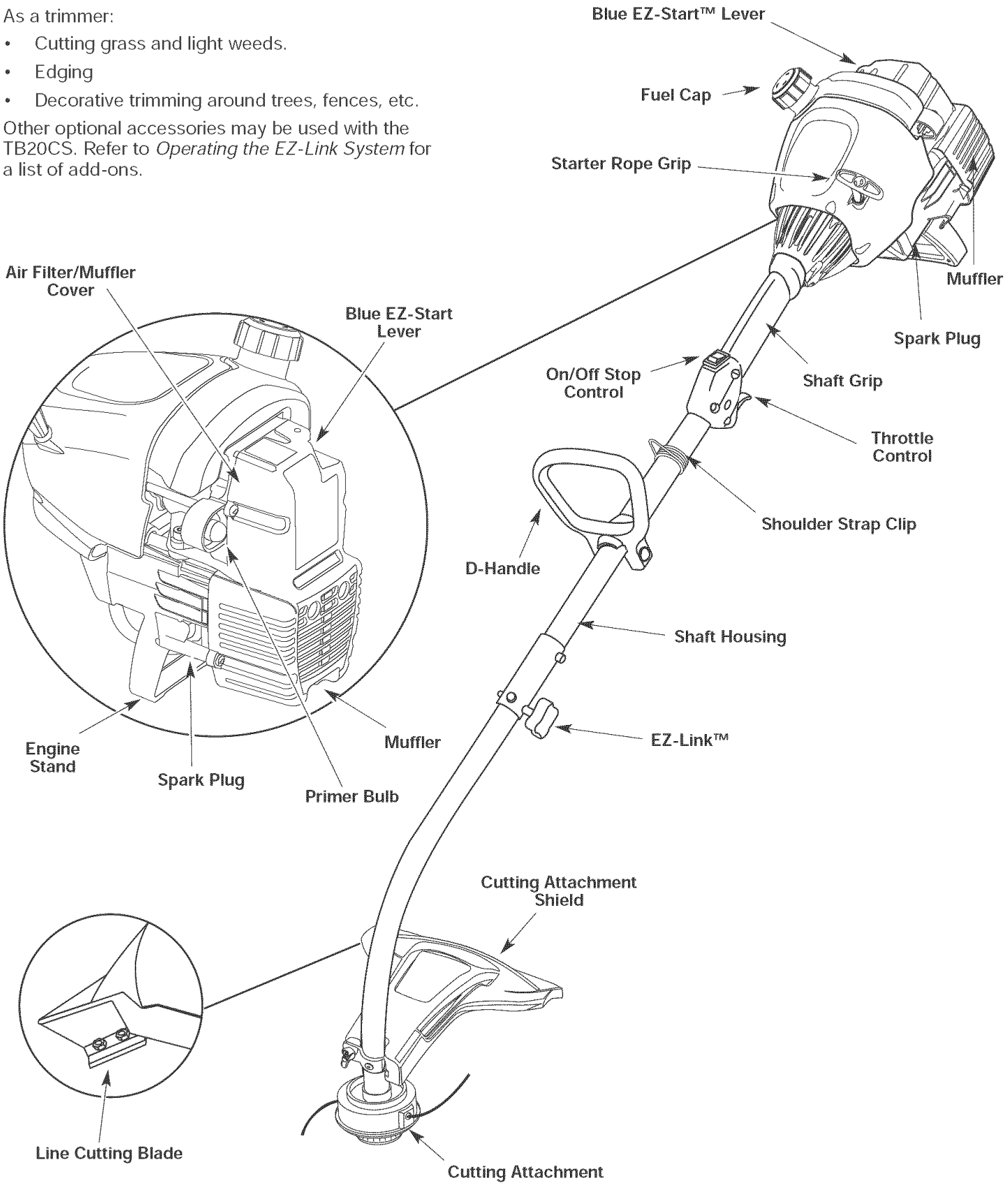

Downloaded from www.Manualslib.com manuals search engine

INSTALL AND ADJUST THE D-HANDLE

1. Push the D-handle down onto the shaft housing so that the handle slants towards the shaft grip (Fig. 1). The squared bolt hole in the handle is to the right.
2. Insert the shoulder bolt into the squared hole in the handle and push through. On the left side of the handle, place the washer on the bolt, then screw the wing nut onto the bolt. Do not tighten until you make the handle adjustment.
3. Rotate the D-handle to place the grip above the top of the shaft housing. Place it a minimum of 6 inches (15.24 cm) from the end of the shaft grip.

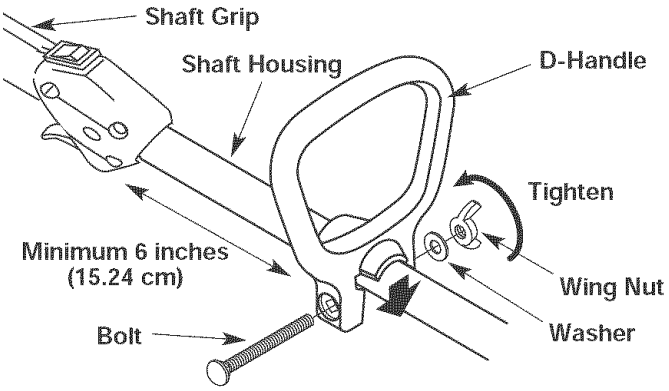

Fig. 1

4. While holding the unit in the operating position (Fig. 2), position the D-handle to the location that provides you the best grip.
5. Tighten the wing nut until the D-handle is secure.

Fig. 2

INSTALL THE CUTTING ATTACHMENT SHIELD

Use the following instructions if the cutting attachment shield on your unit is not installed.

WARNING: Never operate the trimmer without the cutting attachment shield in place to prevent serious personal injury.

1. Place the cutting attachment shield onto the shaft housing. Be sure the guard mounting bracket slides into the slot on the edge of the cutting shield. Rotate the shield into place, counterclockwise. The holes in the guard mounting bracket and cutting attachment shield will line up (Fig. 3).

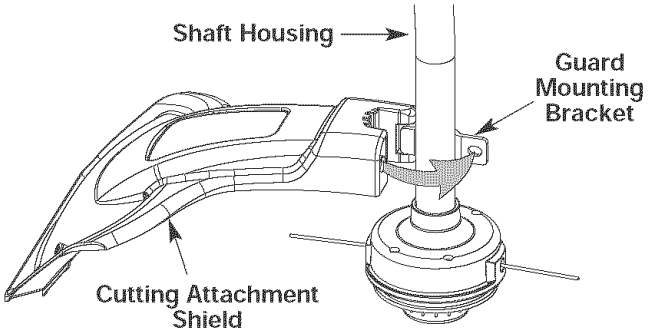

Fig. 3

2. From inside the cutting attachment shield, push the square bolt through the hole until the threaded end protrudes through the guard mounting bracket (Fig. 4).

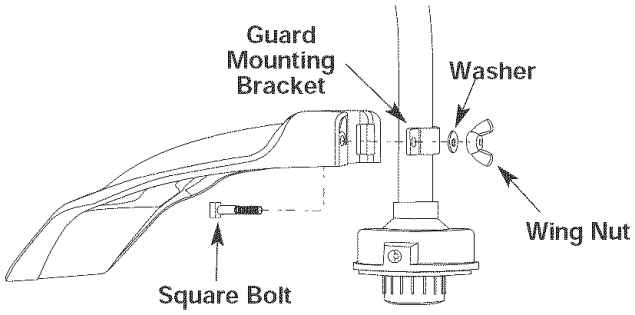

Fig. 4

3. Put the washer on the bolt, then screw the wing nut onto the bolt and tighten. Figure 5 shows the installation process from underneath the unit.

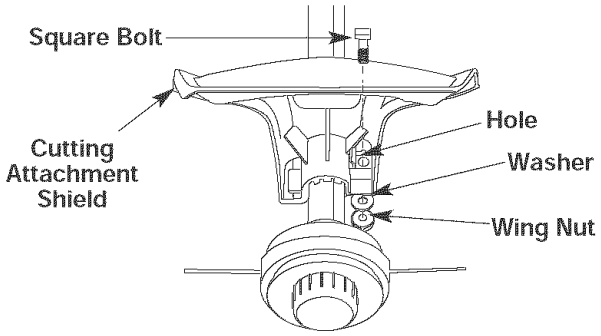

Cutting Attachment and Shield: Underside View

Fig. 5

Downloaded from www.Manualslib.com manuals search engine

OIL AND FUEL MIXING INSTRUCTIONS

Old and/or improperly mixed fuel are the main reasons for the unit not running properly. Be sure to use fresh, clean unleaded fuel. Follow the instructions carefully for the proper fuel/oil mixture.

Definition of Blended Fuels

Today's fuels are often a blend of gasoline and oxygenates such as ethanol, methanol, or MTBE (ether). Alcohol-blended fuel absorbs water. As little as 1% water in the fuel can make fuel and oil separate. It forms acids when stored. When using alcohol-blended fuel, use fresh fuel (less than 60 days old).

Using Blended Fuels

If you choose to use a blended fuel, or its use is unavoidable, follow recommended precautions:

- Always use the fresh fuel mix explained in your operator's manual
- Always agitate the fuel mix before fueling the unit
- Drain the tank and run the engine dry before storing the unit

Using Fuel Additives

The bottle of 2-cycle oil that came with your unit contains a fuel additive which will help inhibit corrosion and minimize the formation of gum deposits. It is recommended that you use our 2-cycle oil with this unit.

If unavailable, use a good 2-cycle oil designed for air-cooled engines along with a fuel additive, such as STA-BIL® Gas Stabilizer or an equivalent. Add 0.8 oz. (23 ml.) of fuel additive per gallon of fuel according to the instructions on the container. NEVER add fuel additives directly to the unit's fuel tank.

CAUTION: For proper engine operation and maximum reliability, pay strict attention to the oil and fuel mixing instructions on the 2-cycle oil container. Using improperly mixed fuel can severely damage the engine.

Thoroughly mix the proper ratio of 2-cycle engine oil with unleaded gasoline in a separate fuel can. Use a 40:1 fuel/oil ratio. Do not mix them directly in the engine fuel tank. See the table below for specific gas and oil mixing ratios.

NOTE: One gallon (3.8 liters) of unleaded gasoline mixed with one 3.2 oz. (95 ml.) bottle of 2-cycle oil makes a 40:1 fuel/oil ratio.

+

UNLEADED GAS	2 CYCLE OIL
1 GALLON US (3.8 LITERS)	3.2 FL. OZ. (95 ml)
1 LITER	25 ml

MIXING RATIO - 40:1

WARNING: Gasoline is extremely flammable. Ignited Vapors may explode. Always stop the engine and allow it to cool before filling the fuel tank. Do not smoke while filling the tank. Keep sparks and open flames at a distance from the area.

WARNING: Remove fuel cap slowly to avoid injury from fuel spray. Never operate the unit without the fuel cap securely in place.

WARNING: Add fuel in a clean, well ventilated outdoor area. Wipe up any spilled fuel immediately. Avoid creating a source of ignition for spilt fuel. Do not start the engine until fuel vapors dissipate.

NOTE: Dispose of the old fuel/oil mix in accordance to Federal, State and Local regulations.

Downloaded from www.Manualslib.com manuals search engine

STARTING/STOPPING INSTRUCTIONS

WARNING: Operate this unit only in a well- ventilated outdoor area. Carbon monoxide exhaust fumes can be lethal in a confined area.

WARNING: Avoid accidental starting. Make sure you are in the starting position when pulling the starter rope (Fig. 8). To avoid serious injury, the operator and unit must be in a stable position while starting.

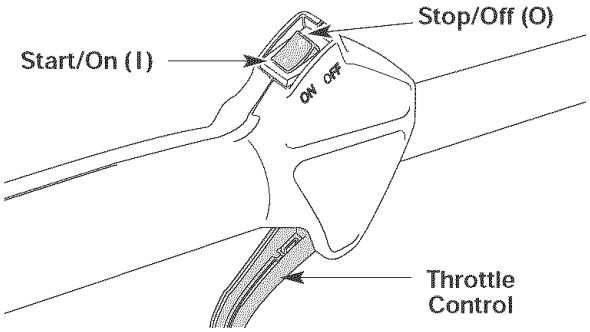

Fig. 6

STARTING INSTRUCTIONS

1. Mix gas with oil. Fill fuel tank with fuel/oil mixture. See *Oil and Fuel Mixing Instructions.*

NOTE: There is no need to turn the unit on. The On/Off Stop Control is in the ON (I) position at all times.

2. Fully press and release the primer bulb 10 times, slowly. Some amount of **fuel should be visible in the primer bulb** and fuel lines (Fig. 7). If you can't see fuel in the bulb, press and release the bulb as many times as it takes before you can see fuel in it.
3. **Push the Blue EZ-Start™ Lever towards the primer bulb** until it clicks and locks into place (Fig. 7).
4. Crouch in the starting position and **do not squeeze the throttle control** (Fig. 8). Pull the starter rope out with a **controlled and steady motion** until the engine starts.

NOTE: The unit uses Spring Assist Starting™, which significantly reduces the effort required to start the engine. You must pull the starter rope out far enough to hear the engine attempt to start. There is no need to pull the rope briskly-- there is no harsh resistance when pulling. Be aware that this starting method is vastly different from (and much easier than) what you may be used to.

5. When the engine starts, squeeze the throttle control for 15 to 30 seconds. This will warm up the unit. **The Blue EZ-Start™ Lever will click off automatically** when you squeeze the throttle control.

IF... The engine does not start, go back to step 2.

IF... The engine stops *while* you are squeezing the throttle, go back to step 3.

IF... The engine stops *before* you squeeze the throttle control, hold the throttle control and pull the starter rope until the trimmer starts.

NOTE: If you are having trouble starting the unit or are operating in extreme temperatures (below 40° F, above 90° F), refer to the *Troubleshooting* section.

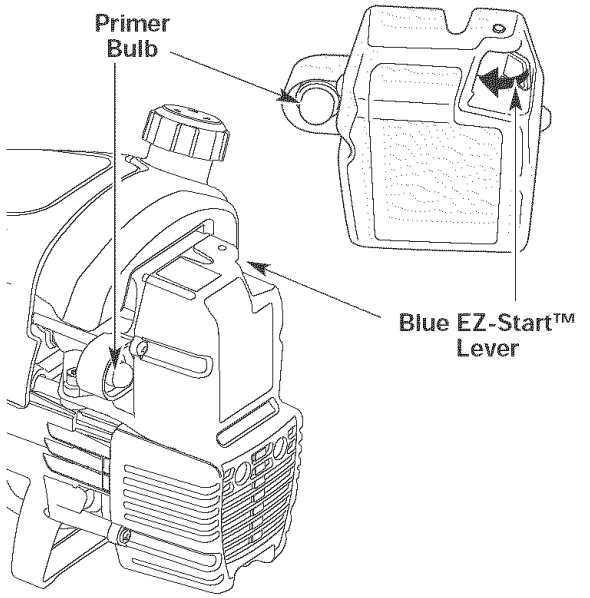

Fig. 7

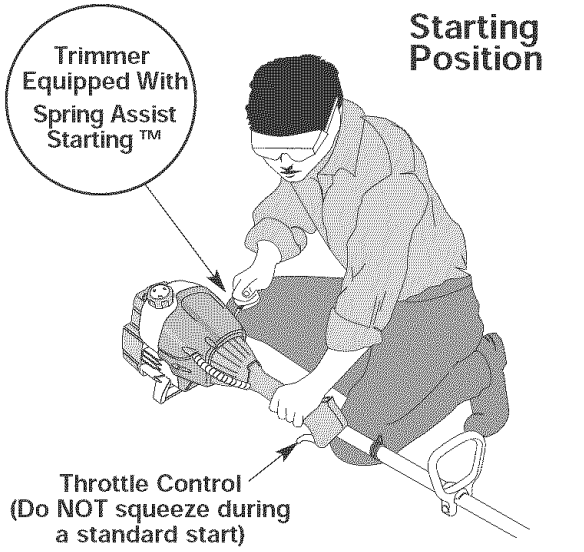

Fig. 8

STOPPING INSTRUCTIONS

1. Release your finger from the throttle control. Allow the engine to cool down by idling.
2. Put the On/Off Stop Control in the OFF (O) position (Fig. 6).

Downloaded from www.Manualslib.com manuals search engine

OPERATING THE EZ-LINK™ SYSTEM

The EZ-Link™ system enables the use of these optional Add-Ons.

Cultivator . . . . . TBGC
Edger . . . . . TBLE
Hedge Trimmer . . . . . TBAH
Straight Shaft Trimmer . . . . . TBSS
Turbo Blower . . . . . TBTB
Pole Saw . . . . . TBPS
Brushcutter . . . . . .TBBC*

***Do NOT use this attachment with an electric powered product.**

WARNING: Before you begin using any attachment, read and understand the manual that came with the attachment. Follow all safety information contained within.

Removing the Cutting Attachment or Add-Ons

1. Turn the knob counterclockwise to loosen (Fig. 9).
2. Press and hold the release button (Fig. 9).
3. While firmly holding the upper shaft housing, pull the cutting attachment or add-on straight out of the EZ-Link™ coupler (Fig. 10).

WARNING: To avoid serious personal injury and damage to the unit, shut the unit off before removing or installing add-ons.

Installing the Cutting Attachment or Add-Ons

NOTE: To make installing or removing the add-on easier, place the unit on the ground or on a work bench.

1. Turn knob counterclockwise to loosen (Fig. 9).

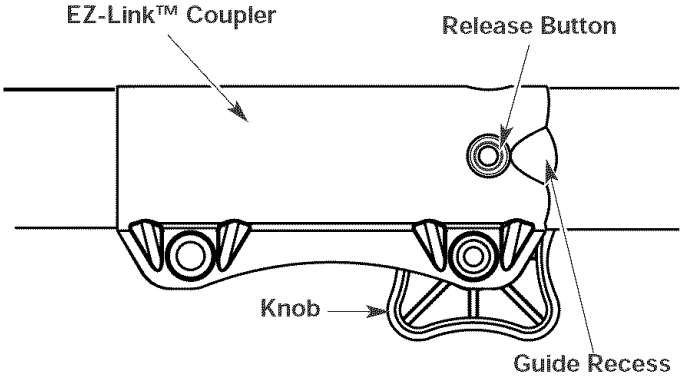

Fig. 9

2. While firmly holding the add-on, push it straight into the EZ-Link™ coupler (Fig. 10).

NOTE: Aligning the release button with the guide recess will help installation (Fig. 9).

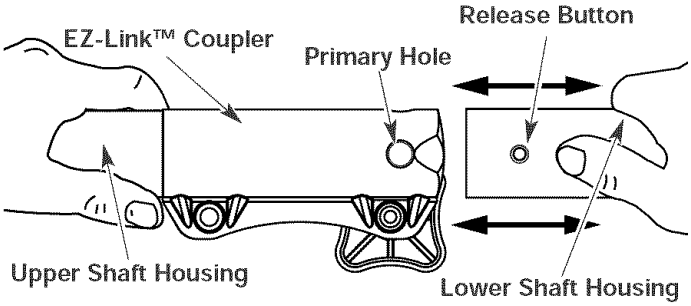

Fig. 10

3. Turn the knob clockwise to tighten (Fig. 11).

CAUTION: Lock the release button in the primary hole (Fig. 10) and securely tighten the knob before operating this unit.

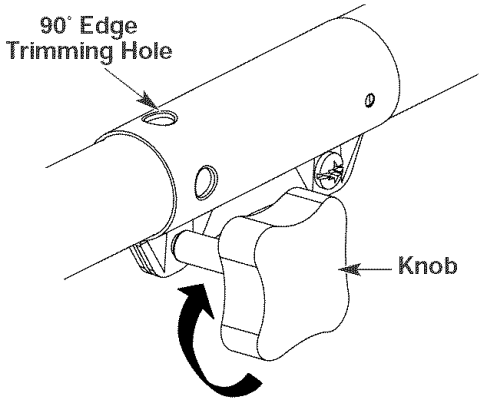

Fig. 11

CAUTION: The add-ons with the coupler system is to be used in the primary hole only. Using the wrong hole could lead to personal injury or damage to the unit.

For decorative trimming/edging with the **line head cutting attachment**, lock the release button of the cutting attachment into the 90° hole (Fig. 11).

Downloaded from www.Manualslib.com manuals search engine

HOLDING THE TRIMMER

WARNING: Always wear eye, hearing, foot and body protection to reduce the risk of injury when operating this unit.

Before operating the unit, stand in the operating position (Fig. 12). Check for the following:

- The operator is wearing eye protection and proper clothing
- With a slightly-bent right arm, the operator's hand is holding the shaft grip
- The operator's left arm is straight, the left hand holding the D-handle
- The unit is at waist level
- The cutting attachment is parallel to the ground and easily contacts the grass without the need to bend over

Fig. 12

ADJUSTING TRIMMING LINE LENGTH

The Bump Head™ cutting attachment allows you to release trimming line without stopping the engine. To release more line, lightly tap the cutting attachment on the ground (Fig. 13) while operating the trimmer at high speed.

NOTE: Always keep the trimming line fully extended. Line release becomes more difficult when the cutting line gets shorter.

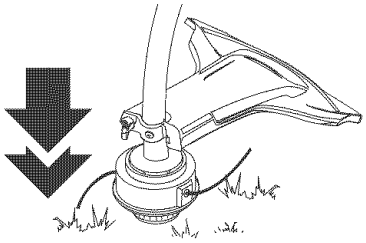

Fig. 13

Each time the head is bumped, about 1 inch (25.4 mm) of trimming line releases. A blade in the cutting attachment shield will cut the line to the proper length if any excess line is released.

For best results, tap the bump knob on bare ground or hard soil. If you attempt a line release in tall grass, the engine may stall. Always keep the trimming line fully extended. Line release becomes more difficult when the cutting line gets shorter.

NOTE: Do not rest the Bump Head™ on the ground while the unit is running.

Some line breakage will occur from:

- Entanglement with foreign matter
- Normal line fatigue
- Attempting to cut thick, stalky weeds
- Forcing the line into objects such as walls or fence posts

CAUTION: Do not remove or alter the line cutting blade assembly. Excessive line length will make the clutch overheat. This may lead to serious personal injury or damage to the unit.

TIPS FOR BEST TRIMMING RESULTS

- Keep the cutting attachment parallel to the ground.
- Do not force the cutting attachment. Allow the tip of the line to do the cutting, especially along walls. Cutting with more than the tip will reduce cutting efficiency and may overload the engine.
- Cut grass over 8 inches (200 mm) by working from top to bottom in small increments to avoid premature line wear or engine drag.
- Cut from right to left whenever possible. Cutting to the left improves the unit's cutting efficiency. Clippings are thrown away from the operator.
- Slowly move the trimmer into and out of the cutting area at the desired height. Move either in a forward-backward or side-to-side motion. Cutting shorter lengths produces the best results.
- Trim only when grass and weeds are dry.
- The life of your cutting line is dependent upon:
  - Following the trimming techniques
  - What vegetation is being cut
  - Where vegetation is cut

For example, the line will wear faster when trimming against a foundation wall as opposed to trimming around a tree.

DECORATIVE TRIMMING

Decorative trimming is accomplished by removing all vegetation around trees, posts, fences and more.

Rotate the whole unit so that the cutting attachment is at a 30° angle to the ground (Fig. 14).

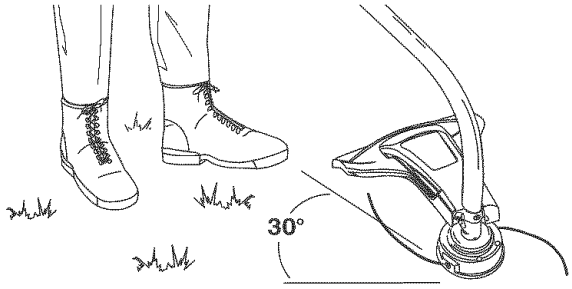

Fig. 14

Downloaded from www.Manualslib.com manuals search engine

MAINTENANCE SCHEDULE

Perform these required maintenance procedures at the frequency stated in the table. These procedures should also be a part of any seasonal tune-up.

NOTE: Some maintenance procedures may require special tools or skills. If you are unsure about these procedures take your unit to any non-road engine repair establishment, individual or authorized service dealer.

WARNING: To prevent serious injury, never perform maintenance or repairs with unit running. Always service and repair a cool unit. Disconnect the spark plug wire to ensure that the unit cannot start.

NOTE: Maintenance, replacement, or repair of the emission control devices and system may be performed by any non-road engine repair establishment, individual or authorized service dealer.

In order to assure peak performance of your engine, inspection of the engine exhaust port may be necessary after 50 hours of operation. If you notice lost RPM, poor performance or general lack of acceleration, this service may be required. If you feel your engine is in need of this inspection, refer service to any non-road engine repair establishment, individual or authorized service dealer for repair. **DO NOT** attempt to perform this process yourself as engine damage may result from contaminants involved in the cleaning process for the port.

FREQUENCY	MAINTENANCE REQUIRED	REFER TO
Before starting engine	Fill fuel tank with fresh fuel	Page 8
Every 10 hours	Clean and re-oil air filter	Page 14
Every 25 hours	Check and clean spark arrestor Check spark plug condition and gap	Page 15 Page 16
Every 50 hours	Inspect exhaust port and spark arrestor screen for clogging or obstruction to assure maximum performance levels	Page 15

LINE INSTALLATION

This section covers both SplitLine™ and standard single line installation.

Always use original equipment manufacturer 0.080 in. (2.03 mm) replacement line. Line other than the specified may make the engine overheat or fail.

WARNING: Never use metal-reinforced line, wire, chain or rope. These can break off and become dangerous projectiles.

There are two methods to replace the trimming line:

- Wind the inner reel with new line
- Install a prewound inner reel

Winding the Existing Inner Reel

1. Hold the outer spool with one hand and unscrew the Bump Knob™ counterclockwise (Fig. 15). Inspect the bolt inside the Bump Knob to make sure it moves freely. Replace the Bump Knob if damaged.

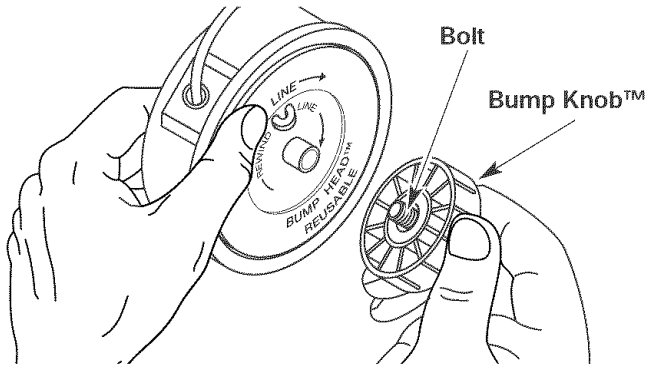

Fig. 15

2. Remove the inner reel from the outer spool (Fig. 16).
3. Remove spring from the inner reel (Fig. 16).
4. Use a clean cloth to clean the the inner reel, spring, shaft, and inner surface of the outer spool.
5. Check the indexing teeth on the inner reel and outer spool for wear (Fig. 17). If necessary, remove burrs or replace the reel and spool.

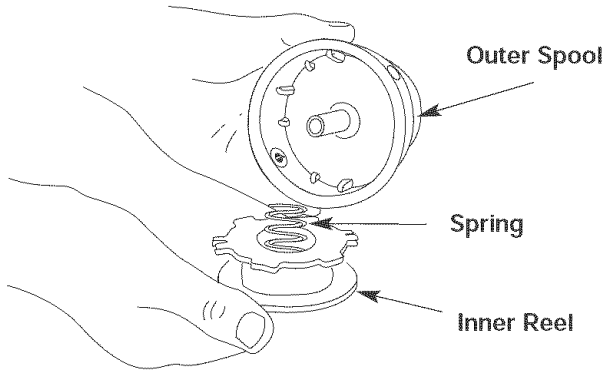

Fig. 16

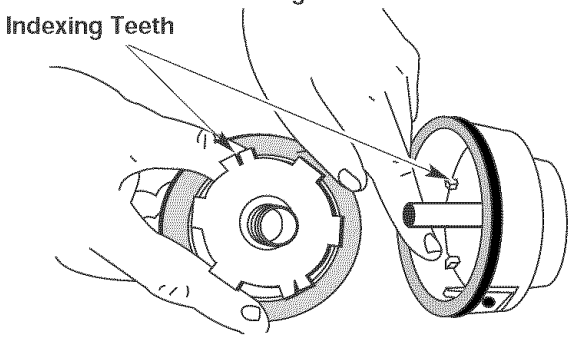

Fig. 17

Downloaded from www.Manualslib.com manuals search engine

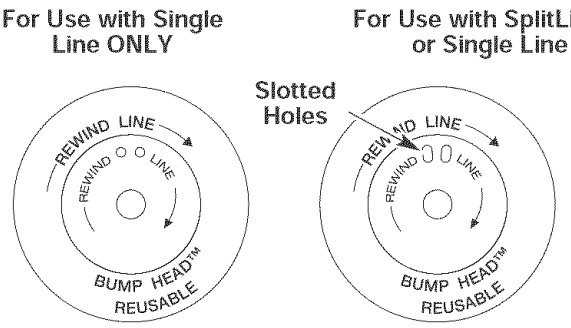

Fig. 18

NOTE: SplitLine™ can only be used with the inner reel with the slotted holes. Single line can be used on either type of inner reel. Use Figure 18 to identify the inner reel you have.

NOTE: Always use the correct line length when installing trimming line on the unit. The line may not release properly if the line is too long.

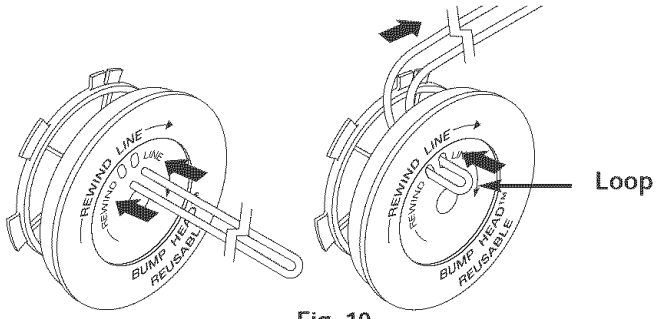

Fig. 19

Single Line Installation

Go To Step 8 for SplitLine™ Installation

6. Take approximately 20 feet (6 m) of new trimming line, loop it into two equal lengths. Insert each end of the line through one of the two holes in the inner reel (Fig. 19). Pull the line through the inner reel so that the loop is as small as possible.
7. Wind the lines in tight even layers, onto the reel (Fig. 20). Wind the line in the direction indicated on the inner reel. Place your index finger between the two lines to stop the lines from overlapping. Do not overlap the ends of the line. Proceed to step 11.

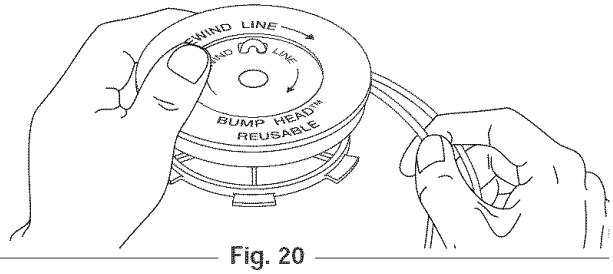

Fig. 20

SplitLine™ Installation

8. Take approximately 10 feet (3 m) of new trimming line. Insert one end of the line through one of the two holes in the inner reel (Fig. 21). Pull the line through the inner reel until only about 4 inches is left out.
9. Insert the end of the line into the open hole in the inner reel and pull the line tight to make the loop as small as possible (Fig. 21).
10. Before winding, split the line back about 6 inches.
11. Wind the line in tight even layers in the direction indicated on the inner reel.

NOTE: Failure to wind the line in the direction indicated will cause the cutting attachment to operate incorrectly.

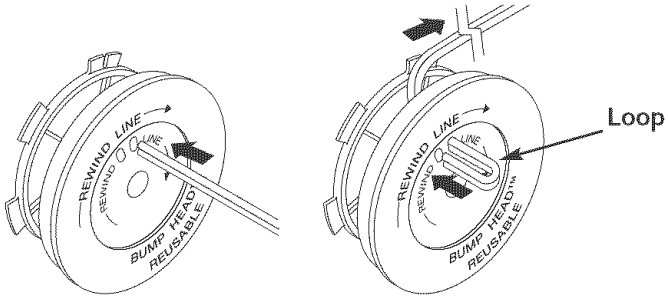

Fig. 21

12. Insert the ends of the line into the two holding slots (Fig. 22).
13. Insert the ends of the line through the eyelets in the outer spool and place inner reel with spring inside the outer spool (Fig. 23). Push the inner reel and outer spool together. While holding the inner reel and outer spool, grasp the ends and pull firmly to release the line from the holding slots in the reel.

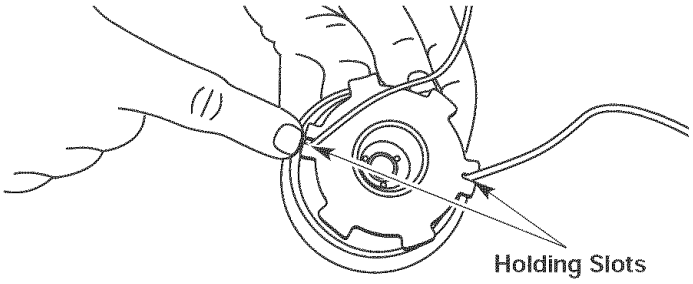

Fig. 22

NOTE: The spring must be assembled on the inner reel before reassembling the cutting attachment.

14. Hold the inner reel in place and install the bump knob by turning clockwise. Tighten securely.

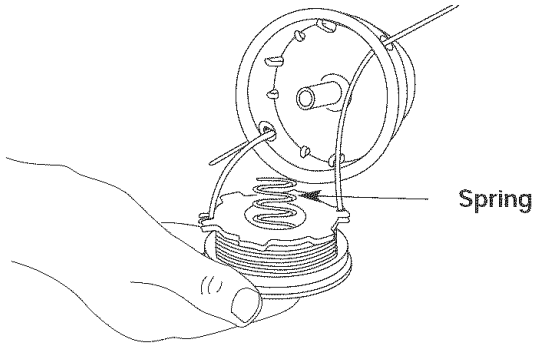

Fig. 23

Downloaded from www.Manualslib.com manuals search engine

INSTALLING A PREWOUND REEL

1. Hold the outer spool with one hand and unscrew the bump knob counterclockwise (Fig. 15). Inspect the bolt inside the bump knob to make sure it moves freely. Replace the bump knob if damaged.
2. Remove the old inner reel from the outer spool (Fig. 16).
3. Remove the spring from the old inner reel (Fig. 16).
4. Place the spring in the new inner reel.

NOTE: The spring must be assembled on the inner reel before reassembling the cutting attachment.

5. Insert the ends of the line through the eyelets in the outer spool (Fig. 23).
6. Place the new inner reel inside the outer spool. Push the inner reel and outer spool together. While holding the inner reel and outer spool, grasp the ends and pull firmly to release the line from the holding slots in the spool.
7. Hold the inner reel in place and install the bump knob by turning clockwise. Tighten securely.

AIR FILTER MAINTENANCE

Removing the Air Filter/Muffler Cover

WARNING: To avoid serious personal injury, always turn your unit off and allow it to cool before you clean or service it.

1. Remove the four (4) screws securing the air filter/muffler cover (Fig. 24). Use a flat blade or T20 Torx bit screwdriver.
2. Pull the cover from the engine. Do not force.

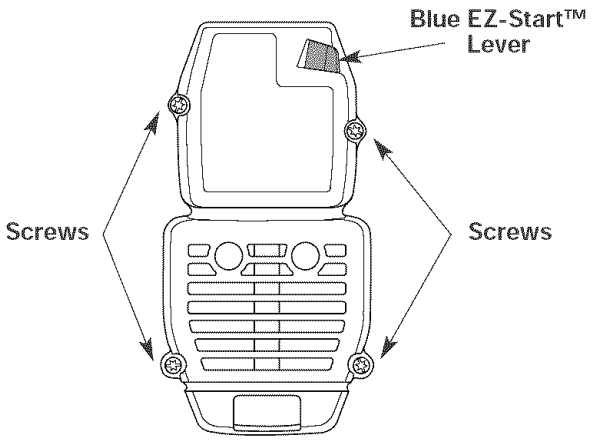

Fig. 24

Cleaning the Air Filter

Clean and re-oil the air filter every 10 hours of operation. It is an important item to maintain. Failure to maintain your air filter properly can result in poor performance or can cause permanent damage to your engine.

1. Remove air filter/muffler cover. Refer to *Removing the Air Filter/Muffler Cover.*
2. Turn cover over and look inside to locate the air filter. Remove the air filter from inside the air filter/muffler cover (Fig. 25).
3. Wash the filter in detergent and water (Fig. 26). Rinse the filter thoroughly. Squeeze out excess water. Allow it to dry completely.
4. Apply enough clean SAE 30 oil to lightly coat the filter (Fig. 27).
5. Squeeze the filter to spread and remove excess oil (Fig. 28).

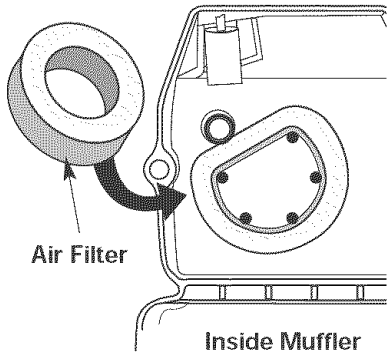

Fig. 25

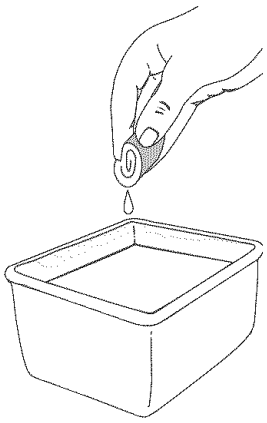

Fig. 26

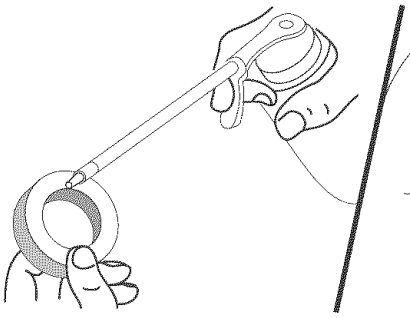

Fig. 27

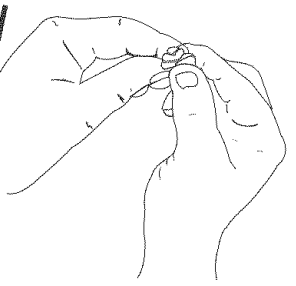

Fig. 28

6. Replace the air filter inside the air filter/muffler cover (Fig. 25).

NOTE: Operating the unit without the air filter and air filter/muffler cover assembly will VOID the warranty.

Reinstalling the Air Filter/Muffler Cover

1. Place the air filter/muffler cover over the back of the carburetor and muffler. Align the screw holes.
2. Insert the four (4) screws into the holes in the air filter/muffler cover (Fig. 24) and tighten. **Do not over tighten.**

Downloaded from www.Manualslib.com manuals search engine

SPARK ARRESTOR MAINTENANCE

NOTE: The exhaust can only flow in one direction: AWAY from the engine. Pay close attention when disassembling the muffler so you can put it back together correctly. Failure to do so will damage the unit and may cause serious personal injury.

1. Remove air filter/muffler cover. Refer to *Removing the Air Filter/Muffler Cover.*
2. Locate the muffler, but do not remove it. Find the two (2) screws on the bottom of the muffler (Fig. 29). These two screws hold the Spark Arrestor Hood Assembly and the spark arrestor screen to the bottom of the muffler. Remove the two (2) screws using either a torx #20 or flat blade screwdriver.
3. Using a small flat blade screwdriver, carefully pry up the spark arrestor screen from the recessed hole, taking care to notice that the "raised" part of the spark arrestor screen is inside the recessed hole. Remove the spark arrestor screen from the muffler.
4. Clean the spark arrestor screen with a wire brush. Replace it if it is damaged, or if you are unable to clean it thoroughly.
5. Reinstall the spark arrestor screen by putting the "raised" portion of the screen inside the recessed hole of the muffler. Make sure that the spark arrestor screen fits flat against the muffler.
6. Place the spark arrestor plate on top of the spark arrestor with the "raised" side up and the opening facing towards the engine (Fig. 29).
7. Place the spark arrestor hood on top of the spark arrestor plate with the "raised" side up and the opening facing AWAY from the engine (Fig. 29). Verify that the exhaust will be directed AWAY from the engine.

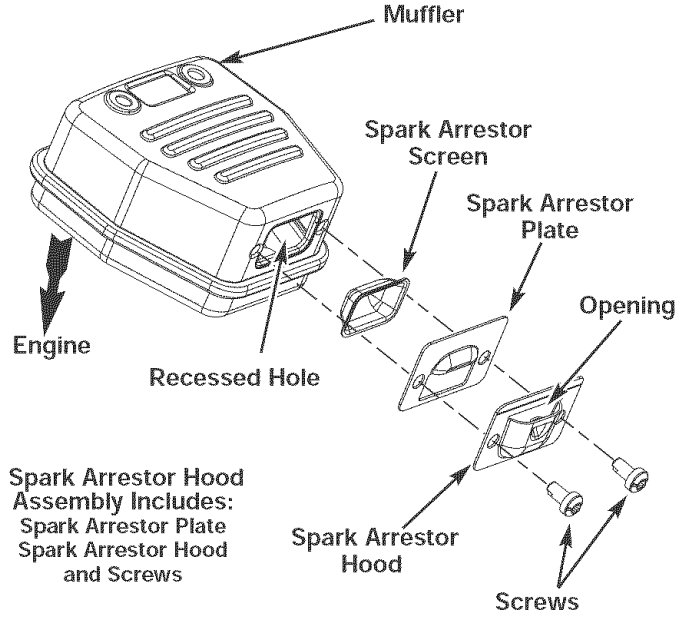

Fig. 29

8. Replace the two screws you removed in Step 2 and tighten them securely.
9. Reinstall the air filter/muffler cover.

WARNING: If the exhaust deflector assembly is not tightened securely, it could fall off causing damage to the unit and possible serious personal injury.

CARBURETOR ADJUSTMENT

The idle speed of the engine is adjustable through the air filter/muffler cover (Fig. 30).

NOTE: Careless adjustments can seriously damage your unit. An authorized service dealer should make carburetor adjustments.

Check Fuel Mixture

Old and/or improperly mixed fuel is usually the reason for improper unit performance. Drain and refill the tank with fresh, properly-mixed fuel prior to making any adjustments. Refer to *Oil and Fuel Information.*

Clean Air Filter

The condition of the air filter is important to the operation of the unit. A dirty air filter will restrict air flow and change the air/fuel mixture. This is often mistaken for an out of adjustment carburetor. Check the condition of the air filter before adjusting the idle speed screw. Refer to *Air Filter Maintenance.*

Adjust Idle Speed Screw

If, after checking the fuel mixture and cleaning the air filter, the engine still will not idle, adjust the idle speed screw as follows:

1. Start the engine and let it run at a high idle for a minute to warm up. Refer to *Starting/Stopping Instructions.*

WARNING: The cutting attachment may spin during idle speed adjustments. Wear protective clothing and observe all safety instructions to prevent serious personal injury.

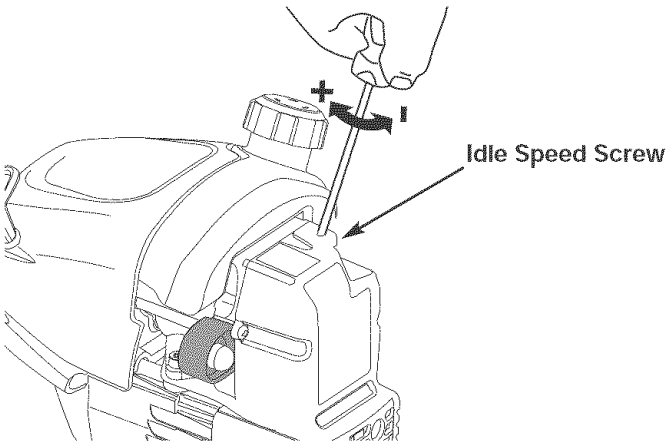

Fig. 30

Downloaded from www.Manualslib.com manuals search engine

2. Release the throttle trigger and let the engine idle. If the engine stops, insert a small phillips or flat blade screwdriver into the hole in the air filter/muffler cover (Fig. 30). Turn the idle speed screw in, **clockwise**, 1/8 of a turn at a time (as needed) until the engine idles smoothly.

NOTE: The cutting attachment should not rotate when the engine idles.

3. If the cutting attachment rotates when the engine idles, turn the idle speed screw **counterclockwise** 1/8 of a turn at a time (as needed), to reduce idle speed.

Checking the fuel mixture, cleaning the air filter, and adjusting the idle speed should solve most engine problems. If not and all of the following are true:

- the engine will not idle
- the engine hesitates or stalls on acceleration
- there is a loss of engine power

Have the carburetor adjusted by an authorized service dealer.

WARNING: To prevent serious personal injury, make sure the cutting attachment has stopped rotating before you turn it off and set it down.

REPLACING THE SPARK PLUG

Use a Champion RDJ7Y spark plug, or equivalent. The correct air gap is **0.020 inch (0.5 mm)**. Remove the plug after every 25 hours of operation and check its condition.

1. Stop the engine and allow it to cool. Grasp the plug wire firmly and pull it from the spark plug.
2. Clean around the spark plug. Remove the spark plug from the cylinder head by turning a 5/8-inch socket counterclockwise.
3. Replace a cracked, fouled or dirty spark plug. Set the air gap at **0.020 in. (0.5 mm)** using a feeler gauge (Fig. 31).

WARNING: Do not sand blast, scrape or clean electrodes. Grit in the engine could damage the cylinder.

4. Install a correctly-gapped spark plug in the cylinder head. Tighten by turning the 5/8-inch socket clockwise until snug.

If using a torque wrench torque to **110-120 in.•lb. (12.3-13.5 N•m). Do not over tighten.**

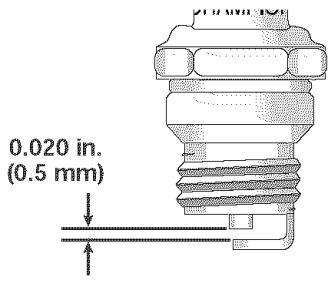

Fig. 31

TRANSPORTING

- Allow the engine to cool before transporting.
- Drain fuel from unit.
- Tighten fuel cap before transporting.
- Secure the unit while transporting.

CLEANING

WARNING: To avoid serious personal injury, always turn your trimmer off and allow it to cool before you clean or maintain it.

Use a small brush to clean off the outside of the unit. Do not use strong detergents. Household cleaners that contain aromatic oils such as pine and lemon, and solvents such as kerosene, can damage plastic housing or handle. Wipe off any moisture with a soft cloth.

STORAGE

- Never store a fueled unit where fumes may reach an open flame or spark.
- Allow the engine to cool before storing.
- Store the unit locked up to prevent unauthorized use or damage.
- Store the unit in a dry, well-ventilated area.
- Store the unit out of the reach of children.

LONG TERM STORAGE

If you plan on storing the unit for an extended time, use the following storage procedure:

1. Drain all fuel from the fuel tank into a container with the same 2-cycle fuel mixture. Do not use fuel that has been stored for more than 60 days. Dispose of the old fuel/oil mix in accordance to Federal, State and Local regulations.
2. Start the engine and allow it to run until it stalls. This ensures that all fuel has been drained from the carburetor.
3. Allow the engine to cool. Remove the spark plug and put 1 oz. (30 ml) of any high quality motor oil or 2-cycle oil into the cylinder. Pull the starter rope slowly to distribute the oil. Reinstall the spark plug.

NOTE: Remove the spark plug and drain all of the oil from the cylinder before attempting to start the trimmer after storage.

4. Thoroughly clean the unit and inspect it for any loose or damaged parts. Repair or replace damaged parts and tighten loose screws, nuts or bolts. The unit is ready for storage.

Downloaded from www.Manualslib.com manuals search engine

TROUBLESHOOTING

ENGINE WILL NOT START

CAUSE	ACTION
Empty fuel tank	Fill fuel tank with properly mixed fuel
Primer bulb wasn't pressed enough	Press primer bulb fully and slowly 10 times
Engine is flooded	Squeeze the trigger and pull the starter rope
Old or improperly mixed fuel	Drain gas tank and add fresh fuel mixture
Fouled spark plug	Replace or clean the spark plug
Plugged spark arrestor	Clean or replace spark arrestor
Blue EZ-Start lever wasn't flipped/set	Move lever to the starting position
The outside temperature is below 40° F	Pull the starter rope up to 10-15 times
The outside temperature is above 90° F	Squeeze the throttle control and pull the starter rope

ENGINE WILL NOT IDLE

CAUSE	ACTION
Air filter is plugged	Replace or clean the air filter
Old or improperly mixed fuel	Drain gas tank and add fresh fuel mixture
Improper carburetor adjustment	Adjust according to the *Carburetor Adjustments* section

ENGINE WILL NOT ACCELERATE

CAUSE	ACTION
Old or improperly mixed fuel	Drain gas tank and add fresh fuel mixture
Improper carburetor adjustment	Take to an authorized service dealer for an adjustment
Cutting attachment bound with grass	Stop the engine and clean the cutting attachment
Dirty air filter	Clean or replace the air filter
Plugged spark arrestor	Clean or replace spark arrestor

ENGINE LACKS POWER OR STALLS WHEN CUTTING

CAUSE	ACTION
Old or improperly mixed fuel	Drain gas tank and add fresh fuel mixture
Improper carburetor adjustment	Take to an authorized service dealer for an adjustment
Fouled spark plug	Replace or clean the spark plug
Plugged spark arrestor	Clean or replace spark arrestor

CUTTING ATTACHMENT WILL NOT ADVANCE LINE

CAUSE	ACTION
Cutting attachment bound with grass	Stop the engine and clean cutting attachment
Cutting attachment out of line	Refill with new line
Inner reel bound up	Replace the inner reel
Cutting head dirty	Clean inner reel and outer spool
Line welded	Disassemble, remove the welded section and rewind
Line twisted when refilled	Disassemble and rewind the line
Not enough line is exposed	Push the bump knob and pull out line until 4 inches (102 mm) of line is outside of the cutting attachment

CUTTING LINE ADVANCES UNCONTROLLABLY

CAUSE	ACTION
Oil, cleaner or lubricant in cutting head	Clean and thoroughly dry the cutting head

If further assistance is required, contact your authorized service dealer.

Downloaded from www.Manualslib.com manuals search engine

SPECIFICATIONS

ENGINE*

Engine Type	Air-Cooled, 2-Cycle
Stroke	1.25 in. (31.75 mm)
Displacement	1.9 cu in. (31 cc)
Clutch Type	Centrifugal
Idle Speed RPM	2,800 - 3,600 rpm
Operating RPM	7,200+ rpm
Ignition Type	Electronic
Ignition Switch	Rocker Switch
Spark Plug Gap	0.020 in. (0.5 mm)
Lubrication	Fuel/Oil Mixture
Fuel/Oil Ratio	40:1
Carburetor	Diaphragm, All-Position
Starter	Spring Assist Starting™ Auto Rewind
Muffler	Baffled with Guard
Throttle	Manual Spring Return
Fuel Tank Capacity	13 oz. (384 ml)

DRIVE SHAFT & CUTTING ATTACHMENT*

Drive Shaft Housing	Steel Tube (EZ-Link™)
Throttle Control	Finger-Tip Trigger
Approximate Unit Weight (No fuel, with cutting attachment, shield, and D-handle)	13 lbs. (6 kg)
Cutting Mechanism	Bump Head™
Line Spool Diameter	3 inches (76.2 mm)
Trimming Line Diameter	0.080 inches (2.03 mm)
Cutting Path Diameter	17 inches (43.18 cm)

*All specifications are based on the latest product information available at the time of printing. We reserve the right to make changes at any time without notice.

Downloaded from www.Manualslib.com manuals search engine

California / EPA Emission Control Warranty Statement

Your Warranty Rights and Obligations

The California Air Resources Board, the Environmental Protection Agency and MTD LLC (MTD) are pleased to explain the emission control system warranty on your 2000 and later small off-road engine. New small off-road engines must be designed, built and equipped to meet stringent anti-smog standards. MTD must warrant the emission control system on your small off-road engine for the periods of time listed below provided there has been no abuse, neglect or improper maintenance of your small off-road engine.

Your emission control system may include parts such as the carburetor or fuel-injected system, the ignition system, and catalytic converter. Also included may be hoses, belts, connectors and other emission-related assemblies.

Where a warrantable condition exists, Troy-Bilt will repair your small off-road engine at no cost to you including diagnosis, parts and labor.

The 2000 and later small off-road engines are warranted for two years. If any emission-related part on your engine is defective, the part will be repaired or replaced by Troy-Bilt.

Owners Warranty Responsibilities

• As the small off-road engine owner, you are responsible for the performance of the required maintenance listed in your operator's manual. Troy-Bilt recommends that you retain all receipts covering maintenance on your small off-road engine, but Troy-Bilt cannot deny warranty solely for the lack of receipts or for your failure to ensure the performance of all scheduled maintenance.

• As the small off-road engine owner, you however should be aware that Troy-Bilt may deny you warranty coverage if your small off-road engine or a part has failed due to abuse, neglect, improper maintenance or unapproved modifications.

• You are responsible for presenting your small off-road engine to a Troy-Bilt Authorized Service Center as soon as a problem exists. The warranty repairs should be completed in a reasonable amount of time, not to exceed 30 days.

If you have any questions regarding your warranty rights and responsibilities, you should call 1-800-520-5520.

Manufacturer's Warranty Coverage

• The warranty period begins on the date the engine or equipment is delivered to the retail purchaser.

• The manufacturer warrants to the initial owner and each subsequent purchaser, that the engine is free from defects in material and workmanship which cause the failure of a warranted part for a period of two years.

• Repair or replacement of warranted part will be performed at no charge to the owner at an Authorized Troy-Bilt Service Center. For the nearest location please contact Troy-Bilt at: 1-800-520-5520.

• Any warranted part which is not scheduled for replacement, as required maintenance or which is scheduled for only for regular inspection to the effect of "Repair or Replace as Necessary" is warranted for the warranty period. Any warranted part which is scheduled for replacement as required maintenance will be warranted for the period of time up to the first scheduled replacement point for that part.

• The owner will not be charged for diagnostic labor which leads to the determination that a warranted part is defective, if the diagnostic work is performed at an Authorized Troy-Bilt Service Center.

• The manufacturer is liable for damages to other engine components caused by the failure of a warranted part still under warranty.

• Failures caused by abuse, neglect or improper maintenance are not covered under warranty.

• The use of add-on or modified parts can be grounds for disallowing a warranty claim. The manufacturer is not liable to cover failures of warranted parts caused by the use of add-on or modified parts.

• In order to file a claim, go to your nearest Authorized Troy-Bilt Service Center. Warranty services or repairs will be provided at all Authorized Troy-Bilt Service Centers.

• Any manufacturer approved replacement part may be used in the performance of any warranty maintenance or repair of emission related parts and will be provided without charge to the owner. Any replacement part that is equivalent in performance or durability may be used in non-warranty maintenance or repair and will not reduce the warranty obligations of the manufacturer

• The following components are included in the emission related warranty of the engine, air filter, carburetor, primer, fuel lines, fuel pick up/ fuel filter, ignition module, spark plug and muffler.

Downloaded from www.Manualslib.com manuals search engine

MANUFACTURER'S LIMITED WARRANTY FOR:

TROY-BILT®

The limited warranty set forth below is given by Troy-Bilt LLC with respect to new merchandise purchased and used in the United States, its possessions and territories.

Troy-Bilt LLC warrants this product against defects in material and workmanship for a period of two (2) years commencing on the date of original purchase and will, at its option, repair or replace, free of charge, any part found to be defective in material or workmanship. This limited warranty shall only apply if this product has been operated and maintained in accordance with the Operator's Manual furnished with the product, and has not been subject to misuse, abuse, commercial use, neglect, accident, improper maintenance, alteration, vandalism, theft, fire, water or damage because of other peril or natural disaster. Damage resulting from the installation or use of any accessory or attachment not approved by Troy-Bilt LLC for use with the product(s) covered by this manual will void your warranty as to any resulting damage. This warranty is limited to ninety (90) days from the date of original retail purchase for any Troy-Bilt product that is used for rental or commercial purposes, or any other income-producing purpose.

HOW TO OBTAIN SERVICE: Warranty service is available, WITH PROOF OF PURCHASE THROUGH YOUR LOCAL AUTHORIZED SERVICE DEALER. To locate the dealer in your area, visit our website at www.troybilt.com, check for a listing in the Yellow Pages, call **1-800-520-5520** or write to P.O. Box 361131, Cleveland, OH 44136-0019.

This limited warranty does not provide coverage in the following cases:

A. Tune-ups - Spark Plugs, Carburetor Adjustments, Filters

B. Wear items - Bump Knobs, Outer Spools, Cutting Line, Inner Reels, Starter Pulley, Starter Ropes, Drive Belts

C. Troy-Bilt LLC does not extend any warranty for products sold or exported outside of the United States of America, its possessions and territories, except those sold through Troy-Bilt's authorized channels of export distribution.

Troy-Bilt LLC reserves the right to change or improve the design of any Troy-Bilt Product without assuming any obligation to modify any product previously manufactured.

No implied warranty, including any implied warranty of merchantability or fitness for a particular purpose, applies after the applicable period of express written warranty above as to the parts as identified. No other express warranty or guaranty, whether written or oral, except as mentioned above, given by any person or entity, including a dealer or retailer, with respect to any product shall bind Troy-Bilt LLC During the period of the Warranty, the exclusive remedy is repair or replacement of the product as set forth above. (Some states do not allow limitations on how long an implied warranty lasts, so the above limitation may not apply to you.)

The provisions as set forth in this Warranty provide the sole and exclusive remedy arising from the sales. Troy-Bilt LLC shall not be liable for incidental or consequential loss or damages including, without limitation, expenses incurred for substitute or replacement lawn care services, for transportation or for related expenses, or for rental expenses to temporarily replace a warranted product. (Some states do not allow limitations on how long an implied warranty lasts, so the above limitation may not apply to you.)

In no event shall recovery of any kind be greater than the amount of the purchase price of the product sold. Alteration of the safety features of the product shall void this Warranty. You assume the risk and liability for loss, damage, or injury to you and your property and/or to others and their property arising out of the use or misuse or inability to use the product.

This limited warranty shall not extend to anyone other than the original purchaser, original lessee or the person for whom it was purchased as a gift.

How State Law Relates to this Warranty: This warranty gives you specific legal rights, and you may also have other rights which vary from state to state.

To locate your nearest service dealer dial **1-800-520-5520**.

Troy-Bilt LLC
P.O. Box 361131
Cleveland, OH 44136-0019

Downloaded from www.Manualslib.com manuals search engine

Other ManualsLib Projects

www.manualslib.com

www.manualslib.de

www.manualslib.es

www.manualslib.fr

www.manualslib.nl

www.manualslib.mx

www.manualslib.tech 30+ Languages